CAD FILE:

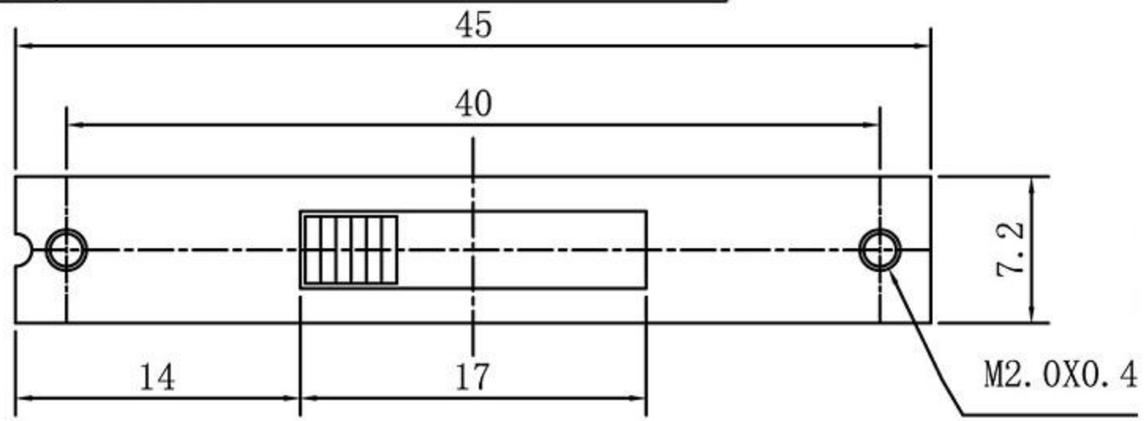

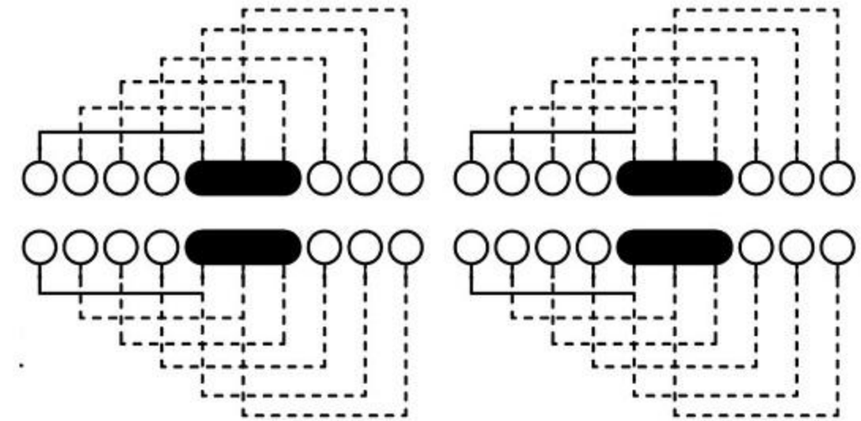

SCHEMATIC (SHORTING)

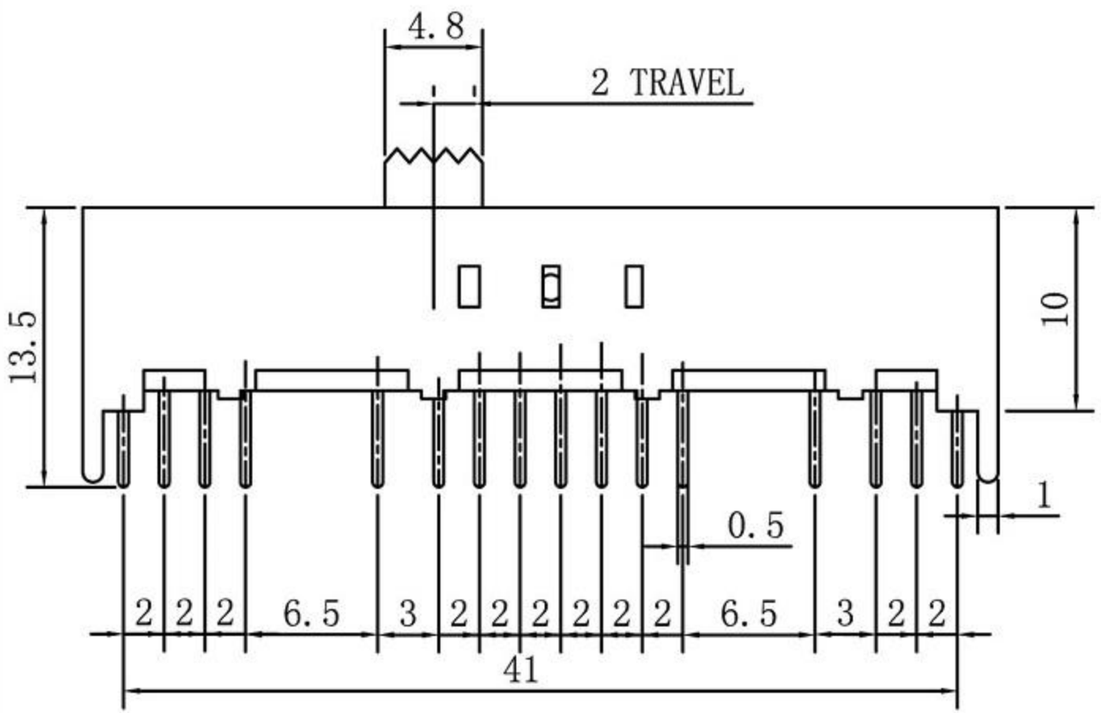

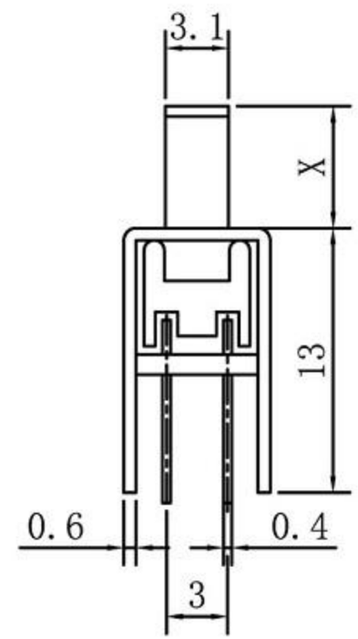

拨动开关立式技术参数：

1. 额定负荷: DC 30V 50V 0.3A 0.5A
2. 接触阻抗: ≤50mΩ
3. 绝缘阻抗: ≥100mΩ DC500V
4. 耐焊温度: 250±5° 5s
5. 使用寿命: 10,000 cycles
6. 使用温度: -25 ℃ to 80 ℃
7. 使用湿度: ≤85% RH
8. 操作力 : 160gf 256gf 300gf 可定制
9. 手柄长度:2mm-10mm 可定制

NO.	PARTS	MATERIALS	Q'TY	FINISH
8				
7	STEEL BALL	STEEL	1	NATURAL
6	SPRING	STEEL WIRE	1	NATURAL
5	CONTACT CLIP	PBS STRIP	2	Ag PLATED
4	TERMINAL	BRASS STRIP	8	Ag PLATED
3	BASE	PHENOLIC RESIN	1	NATURAL
2	FRAME	STEEL STRIP	1	Ni PLATED
1	KNOB	POM	1	BLACK

TOLERANCE UNLESS SPECIFIED

WITHIN / OVER

ISSUE	DATE	DESCRIPTIONS OF REVISION	APPD.
A	2012-10-26	初 版	

TITLE : VERTICAL SLIDE SWITCH

UNIT : mm

DRWG NO.:

MODEL:

SCALE: 3:1

DWN.		2012-10-26
CHK'D		2012-10-26
APPD.		

东莞市高迪电子有限公司